New deal FILTER

Filter with different impurity filtration degrees.
- Metal bowl with external viewing
- Semi-automatic and condensate drainage

TECHNICAL DATA		FIL. ND 1/4''	FIL. ND 3/8''	FIL. ND 1/2''	FIL. ND 3/4''	FIL. ND 1''
Threaded port		1/4''	3/8''	1/2''	3/4''	1''
Degree of filtration		4µm 20µm 50µm			4µm; 20µm; 50µm	
Max. inlet pressure	MPa	1.8			1.8	
	bar	18			18	
	psi	261			261	
Flow rate at 6.3 bar (0.63 MPa-91 psi)	Nl/min	1300	3100		9100	
ΔP 0.5 bar (0.05 MPa – 7 psi)	scfm	46	110		324	
Flow rate at 6.3 bar (0.63 MPa-91 psi)	Nl/min	1720	4100		11000	
ΔP 1 bar (0.1 MPa – 14 psi)	scfm	61	146		391	
Fluid		Compressed air				
Max temperature at 1 MPa; 10 bar; 145 psi	°C	50°				
	°F	122°				
Weight	Kg	0.4	0.9		1.2	
Wall fixing screws		M4x40	M4x55		M6x75	
Mounting position		Vertical				
Drain		Manual - Semi-auto			Manual - Semi-auto	
		Automatic (SAC o RA)			Automatic (RA)	
Bowl capacity	cm^3	10	45		170	

COMPONENTS

① Zamak body
② Aluminium bowl
③ Technopolymer centrifuge
④ Technopolymer baffle plug
⑤ Technopolymer screen
⑥ Clear technopolymer bowl
⑦ Drain (RMSA)
⑧ Sintered bronze filter cartridge
⑨ NBR gaskets

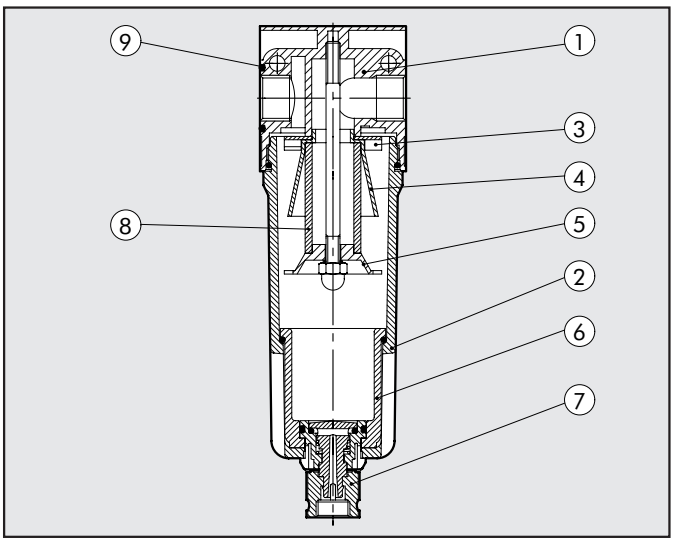

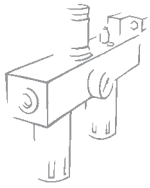

FLOW CHARTS

FIL 1/4

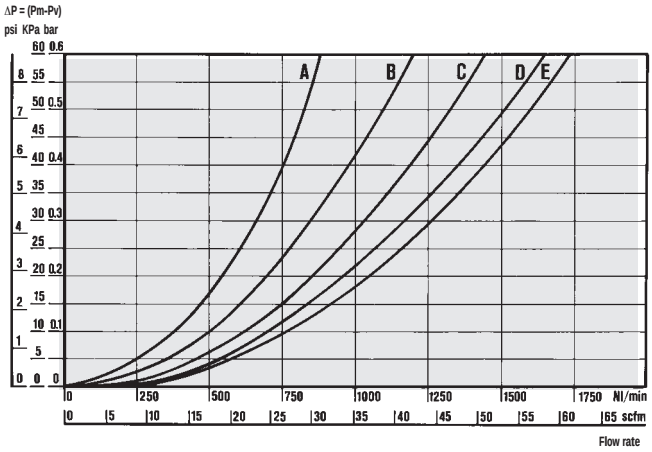

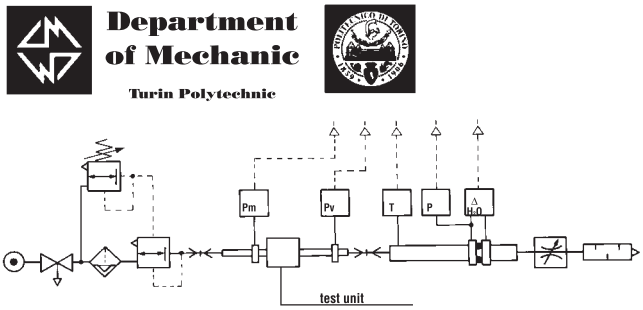

• Flow tests carried out at the Department of Mechanics, Turin Polytechnic, using the computerized test bench following CETOP RP50R recommendations (ISO DIS 6358-2-approved) with ISO 5167 diaphragm gauge.

(A) = 2 bar - 0,2 MPa - 29 psi
(B) = 4 bar - 0,4 MPa - 58 psi
(C) = 6 bar - 0,6 MPa - 87 psi
(D) = 8 bar - 0,8 MPa - 116 psi
(E) = 10 bar - 1 MPa - 145 psi

FIL 3/8 - 1/2

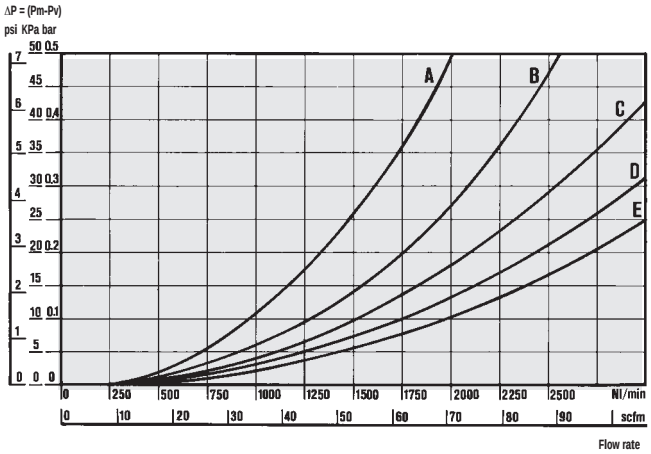

FIL 3/4 - 1''

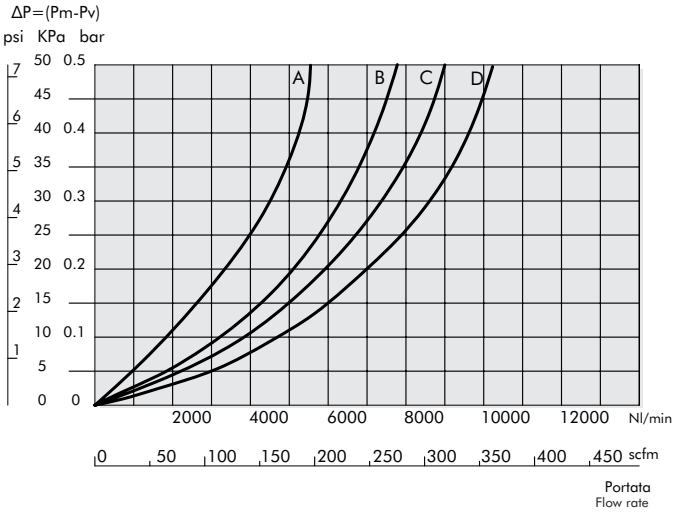

DIMENSIONS

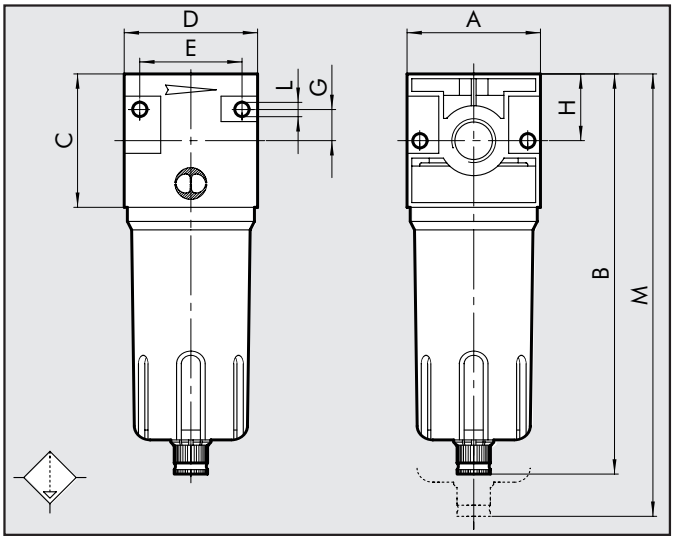

	G 1/4	G 3/8	G 1/2	G 3/4	G 1''
A	42	60		80	
B	142	180		235	
C	42	60		80	
D	42	60		80	
E	32	46		66	
G	10	14		22	
H	21	30		40	
L	M4 hole	M4 hole		M6 hole	
M	185	230		325	

KEY TO CODES

FIL	1/4	4µm	RMSA
ELEMENT	THREADED PORT	DEGREE OF FILTRATION	TYPE OF CONDENSATE DRAIN
FIL	1/4	4µm	RMSA - SAC
	3/8	20µm	RMSA - SAC - RA
	1/2	50µm	
	3/4		RMSA
	1		RA

RMSA: Manual/semi-auto drain
SAC: Automatic drain. Operates by depression – requires variable air take-offs.
RA: Automatic drain. Float-type operation irrespective of the pressure and flow rate.

ORDERING CODES

Code	Description
1221005	FIL 1/4 4 RMSA TMV
1221013	FIL 1/4 4 SAC TMV
1221006	FIL 1/4 20 RMSA TMV
1221014	FIL 1/4 20 SAC TMV
1221008	FIL 1/4 50 RMSA TMV
1221016	FIL 1/4 50 SAC TMV
1321005	FIL 3/8 4 RMSA TMV
1321009	FIL 3/8 4 RA TMV
1321013	FIL 3/8 4 SAC TMV
1321006	FIL 3/8 20 RMSA TMV
1321010	FIL 3/8 20 RA TMV
1321014	FIL 3/8 20 SAC TMV
1321008	FIL 3/8 50 RMSA TMV
1321012	FIL 3/8 50 RA TMV
1321016	FIL 3/8 50 SAC TMV
1421005	FIL 1/2 4 RMSA TMV
1421009	FIL 1/2 4 RA TMV
1421013	FIL 1/2 4 SAC TMV
1421006	FIL 1/2 20 RMSA TMV
1421010	FIL 1/2 20 RA TMV
1421014	FIL 1/2 20 SAC TMV
1421008	FIL 1/2 50 RMSA TMV
1421012	FIL 1/2 50 RA TMV
1421016	FIL 1/2 50 SAC TMV
1521005	FIL 3/4 4 RMSA TMV
1521009	FIL 3/4 4 RA TMV
1521006	FIL 3/4 20 RMSA TMV
1521010	FIL 3/4 20 RA TMV
1521008	FIL 3/4 50 RMSA TMV
1521012	FIL 3/4 50 RA TMV
1621005	FIL 1 4 RMSA TMV
1621009	FIL 1 4 RA TMV
1621006	FIL 1 20 RMSA TMV
1621010	FIL 1 20 RA TMV
1621008	FIL 1 50 RMSA TMV
1621012	FIL 1 50 RA TMV

NOTES